0 601 582 603
Stand } ~~07-01~~
Issue } 07-02-07

Fig./Abb. 1

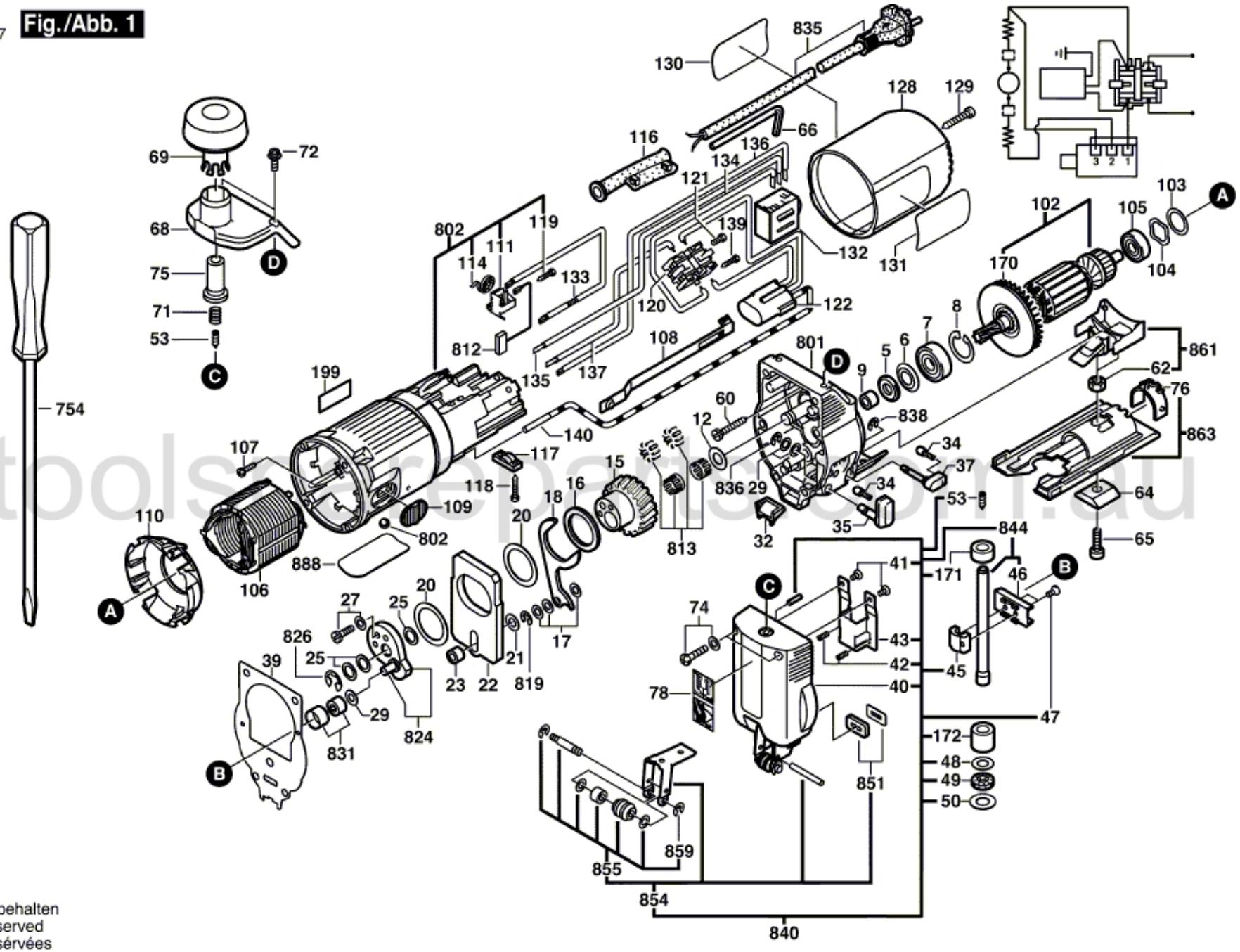

tools-spareparts.com.au

Änderungen vorbehalten
Modifications reserved
Modifications resérvées
Salvo modificaciones